UNIVERSITY OF CAMBRIDGE INTERNATIONAL EXAMINATIONS
General Certificate of Education Advanced Level

CANDIDATE NAME

CENTRE NUMBER

CANDIDATE NUMBER

6607912840

PHYSICS **9702/42**

Paper 4 A2 Structured Questions **October/November 2009**

1 hour 45 minutes

Candidates answer on the Question Paper.

No Additional Materials are required.

READ THESE INSTRUCTIONS FIRST

Write your Centre number, candidate number and name on all the work you hand in.
Write in dark blue or black pen.
You may use a soft pencil for any diagrams, graphs or rough working.
Do not use staples, paper clips, highlighters, glue or correction fluid.
DO **NOT** WRITE IN ANY BARCODES.

Answer **all** questions.
You may lose marks if you do not show your working or if you do not use appropriate units.

At the end of the examination, fasten all your work securely together.
The number of marks is given in brackets [ ] at the end of each question or part question.

For Examiner's Use	
1	
2	
3	
4	
5	
6	
7	
8	
9	
10	
11	
12	
Total	

This document consists of **25** printed pages and **3** blank pages.

DC (SHW) 00445 4/09 13793/3
© UCLES 2009

Data

speed of light in free space,	$c = 3.00 \times 10^{8}\ \text{m s}^{-1}$
permeability of free space,	$\mu_0 = 4\pi \times 10^{-7}\ \text{H m}^{-1}$
permittivity of free space,	$\varepsilon_0 = 8.85 \times 10^{-12}\ \text{F m}^{-1}$
elementary charge,	$e = 1.60 \times 10^{-19}\ \text{C}$
the Planck constant,	$h = 6.63 \times 10^{-34}\ \text{J s}$
unified atomic mass constant,	$u = 1.66 \times 10^{-27}\ \text{kg}$
rest mass of electron,	$m_e = 9.11 \times 10^{-31}\ \text{kg}$
rest mass of proton,	$m_p = 1.67 \times 10^{-27}\ \text{kg}$
molar gas constant,	$R = 8.31\ \text{J K}^{-1}\ \text{mol}^{-1}$
the Avogadro constant,	$N_A = 6.02 \times 10^{23}\ \text{mol}^{-1}$
the Boltzmann constant,	$k = 1.38 \times 10^{-23}\ \text{J K}^{-1}$
gravitational constant,	$G = 6.67 \times 10^{-11}\ \text{N m}^2\ \text{kg}^{-2}$
acceleration of free fall,	$g = 9.81\ \text{m s}^{-2}$

© UCLES 2009

Formulae

uniformly accelerated motion, $s = ut + \frac{1}{2}at^2$
$v^2 = u^2 + 2as$

work done on/by a gas, $W = p\Delta V$

gravitational potential, $\phi = -\frac{Gm}{r}$

hydrostatic pressure, $p = \rho gh$

pressure of an ideal gas, $p = \frac{1}{3}\frac{Nm}{V}\langle c^2 \rangle$

simple harmonic motion, $a = -\omega^2 x$

velocity of particle in s.h.m., $v = v_0 \cos \omega t$
$v = \pm \omega \sqrt{(x_0^2 - x^2)}$

electric potential, $V = \frac{Q}{4\pi\varepsilon_0 r}$

capacitors in series, $1/C = 1/C_1 + 1/C_2 + \ldots$

capacitors in parallel, $C = C_1 + C_2 + \ldots$

energy of charged capacitor, $W = \frac{1}{2}QV$

resistors in series, $R = R_1 + R_2 + \ldots$

resistors in parallel, $1/R = 1/R_1 + 1/R_2 + \ldots$

alternating current/voltage, $x = x_0 \sin \omega t$

radioactive decay, $x = x_0 \exp(-\lambda t)$

decay constant, $\lambda = \frac{0.693}{t_{\frac{1}{2}}}$

© UCLES 2009

[Turn over

Section A

Answer **all** the questions in the spaces provided.

1 **(a)** The Earth may be considered to be a uniform sphere of radius 6.38×10^3 km, with its mass concentrated at its centre.

(i) Define *gravitational field strength*.

.....

..... [1]

(ii) By considering the gravitational field strength at the surface of the Earth, show that the mass of the Earth is 5.99×10^{24} kg.

[2]

(b) The Global Positioning System (GPS) is a navigation system that can be used anywhere on Earth. It uses a number of satellites that orbit the Earth in circular orbits at a distance of 2.22×10^4 km above its surface.

(i) Use data from **(a)** to calculate the angular speed of a GPS satellite in its orbit.

angular speed = ... rad s^{-1} [3]

© UCLES 2009

(ii) Use your answer in **(i)** to show that the satellites are not in geostationary orbits.

[3]

(c) The planes of the orbits of the GPS satellites in **(b)** are inclined at an angle of 55° to the Equator.

Suggest why the satellites are not in equatorial orbits.

.....

..... [1]

2 **(a)** State what is meant by the *internal energy* of a gas.

.....

.....

..... [2]

(b) The first law of thermodynamics may be represented by the equation

$$\Delta U = q + w.$$

State what is meant by each of the following symbols.

$+\Delta U$ .....

$+q$ .....

$+w$ .....

[3]

(c) An amount of 0.18 mol of an ideal gas is held in an insulated cylinder fitted with a piston, as shown in Fig. 2.1.

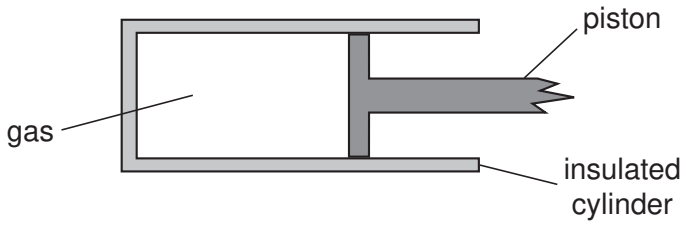

Fig. 2.1

Atmospheric pressure is 1.0×10^5 Pa.

The volume of the gas is suddenly increased from 1.8×10^3 cm^3 to 2.1×10^3 cm^3.

For the expansion of the gas,

(i) calculate the work done by the gas and hence show that the internal energy changes by 30 J,

[3]

(ii) determine the temperature change of the gas and state whether the change is an increase or a decrease.

change = ... K

.....
[3]

3 The variation with displacement x of the acceleration a of the centre of the cone of a loudspeaker is shown in Fig. 3.1.

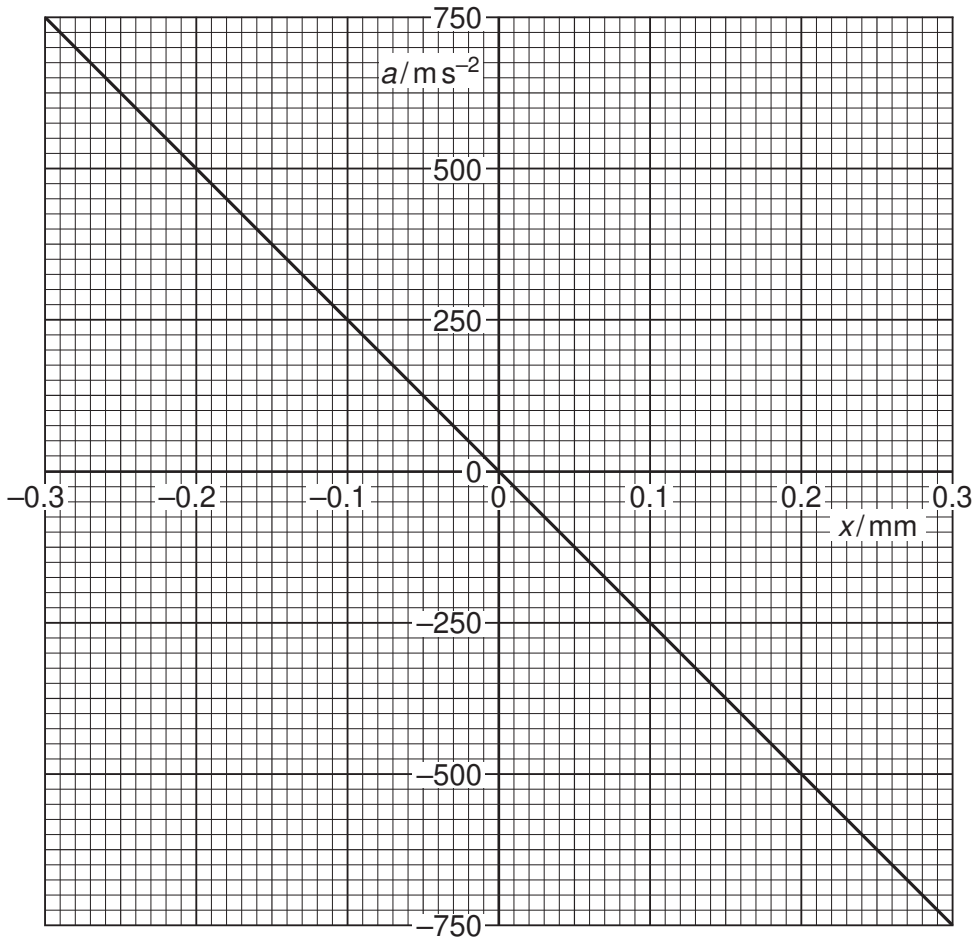

Fig. 3.1

(a) State the two features of Fig. 3.1 that show that the motion of the cone is simple harmonic.

1. .....

2. .....

[2]

(b) Use data from Fig. 3.1 to determine the frequency, in hertz, of vibration of the cone.

frequency = ... Hz [3]

© UCLES 2009

(c) The frequency of vibration of the cone is now reduced to one half of that calculated in **(b)**.

The amplitude of vibration remains unchanged.

On the axes of Fig. 3.1, draw a line to represent the variation with displacement x of the acceleration a of the centre of the loudspeaker cone.

[2]

4 **(a)** Define *capacitance*.

.....

..... [1]

(b) An isolated metal sphere of radius R has a charge $+Q$ on it.

The charge may be considered to act as a point charge at the centre of the sphere.

Show that the capacitance C of the sphere is given by the expression

$$C = 4\pi\varepsilon_0 R$$

where ε_0 is the permittivity of free space.

[1]

(c) In order to investigate electrical discharges (lightning) in a laboratory, an isolated metal sphere of radius 63 cm is charged to a potential of 1.2×10^6 V.

At this potential, there is an electrical discharge in which the sphere loses 75% of its energy.

Calculate

(i) the capacitance of the sphere, stating the unit in which it is measured,

capacitance = ... [3]

© UCLES 2009

(ii) the potential of the sphere after the discharge has taken place.

potential = ... V [3]

5 Two long straight vertical wires X and Y pass through a horizontal card, as shown in Fig. 5.1.

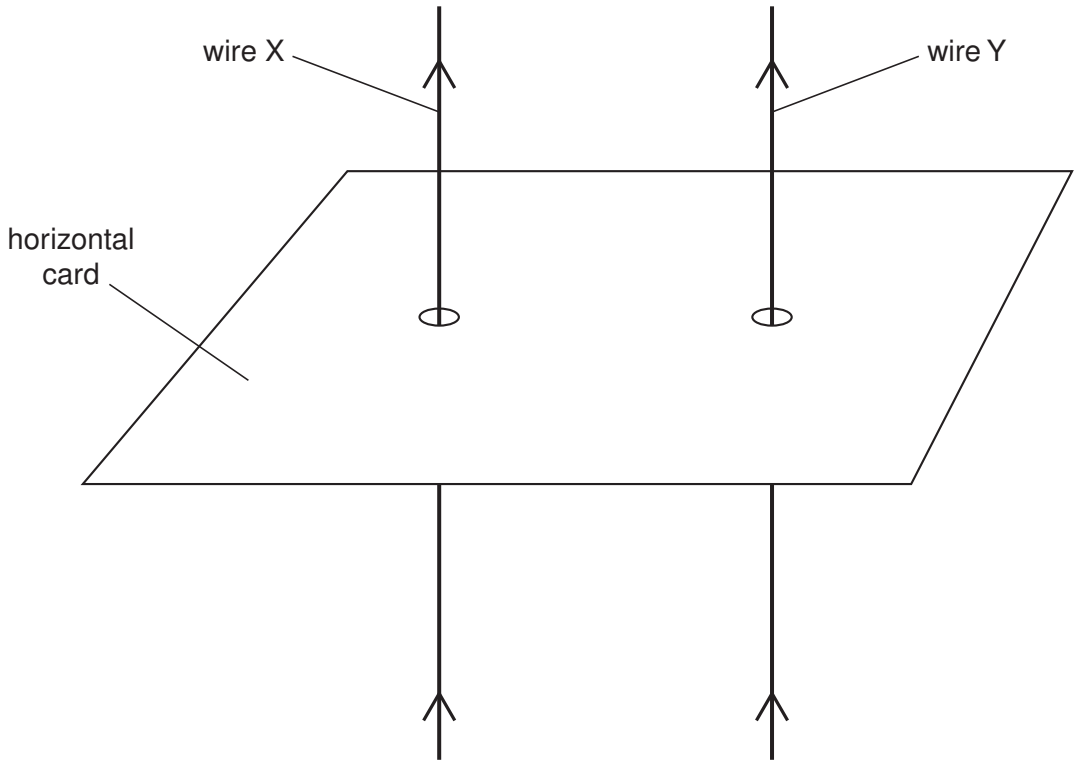

Fig. 5.1

The current in each wire is in the upward direction.

The top view of the card, seen by looking vertically downwards at the card, is shown in Fig. 5.2.

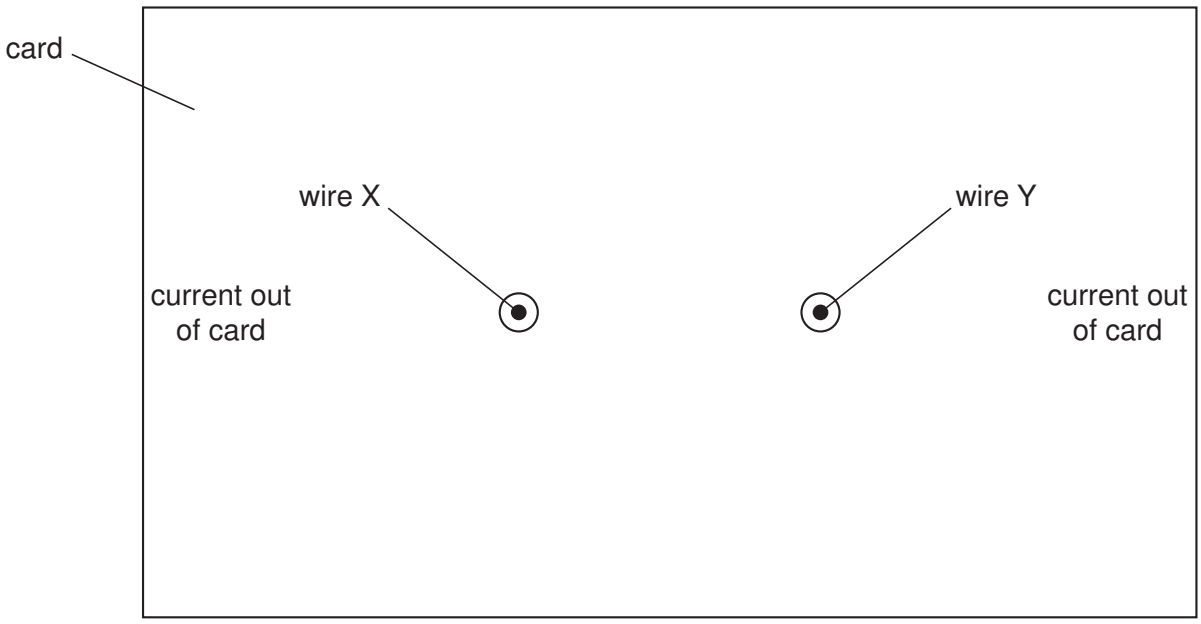

Fig. 5.2 (not to scale)

© UCLES 2009

(a) On Fig. 5.2,

(i) draw four field lines to represent the pattern of the magnetic field around wire X due solely to the current in wire X, [2]

(ii) draw an arrow to show the direction of the force on wire Y due to the magnetic field of wire X. [1]

(b) The magnetic flux density B at a distance x from a long straight wire due to a current I in the wire is given by the expression

$$B = \frac{\mu_0 I}{2\pi x},$$

where μ_0 is the permeability of free space.

The current in wire X is 5.0 A and that in wire Y is 7.0 A. The separation of the wires is 2.5 cm.

(i) Calculate the force per unit length on wire Y due to the current in wire X.

force per unit length = ... $\mathrm{N\,m^{-1}}$ [4]

(ii) The currents in the wires are not equal.

State and explain whether the forces on the two wires are equal in magnitude.

.....

.....

..... [2]

© UCLES 2009

6 An ideal transformer is illustrated in Fig. 6.1.

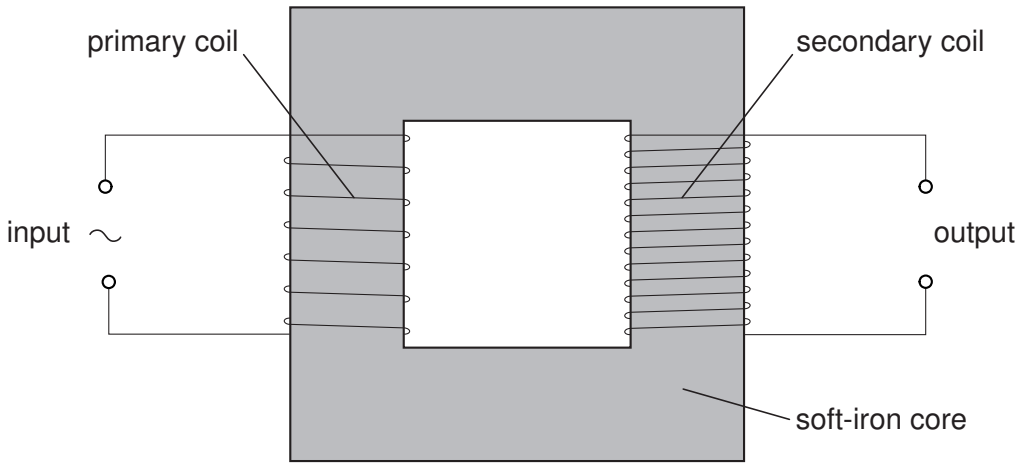

Fig. 6.1

(a) (i) State Faraday's law of electromagnetic induction.

.....

.....

..... [2]

(ii) Use the law to explain why a transformer will not operate using a direct current input.

.....

.....

..... [2]

(b) (i) State Lenz's law.

.....

.....

..... [2]

(ii) Use Lenz's law to explain why the input potential difference and the output e.m.f. are not in phase.

.....

.....

..... [2]

© UCLES 2009

(c) Electrical energy is usually transmitted using alternating high voltages.

Suggest one advantage, for the transmission of electrical energy, of using

(i) alternating voltage, ...

..... [1]

(ii) high voltage. .....

..... [1]

7 **(a)** Explain how a line emission spectrum leads to an understanding of the existence of discrete electron energy levels in atoms.

.....

.....

.....

..... [3]

(b) Some of the lines of the emission spectrum of atomic hydrogen are shown in Fig. 7.1.

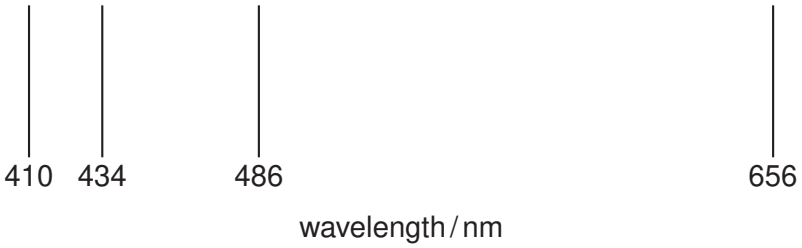

Fig. 7.1

The photon energies associated with some of these lines are shown in Fig. 7.2.

wavelength / nm	photon energy / 10^{-19} J
410	4.85
434	4.58
486	……
656	3.03

Fig. 7.2

(i) Complete Fig. 7.2 by calculating the photon energy for a wavelength of 486 nm.

[2]

(ii) Energy levels of a single electron in a hydrogen atom are shown in Fig. 7.3.

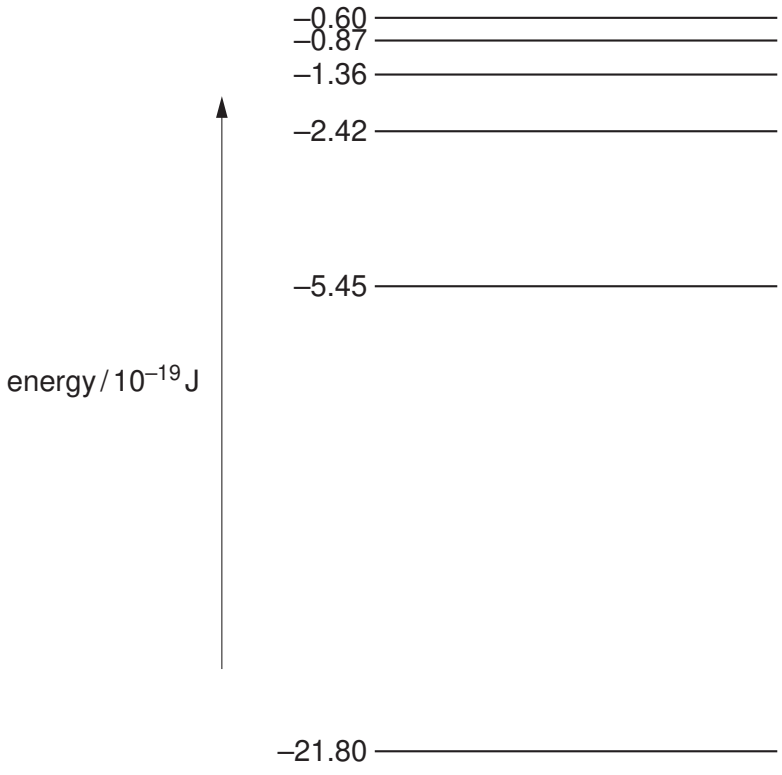

Fig. 7.3 (not to scale)

Use data from **(i)** to show, on Fig. 7.3, the transitions associated with each of the four spectral lines shown in Fig. 7.1. Show each transition with an arrow. [2]

8 **(a)** State what is meant by the *decay constant* of a radioactive isotope.

.....

.....

..... [2]

(b) Show that the decay constant λ is related to the half-life $t_{\frac{1}{2}}$ by the expression

$$\lambda t_{\frac{1}{2}} = 0.693.$$

[3]

(c) Cobalt-60 is a radioactive isotope with a half-life of 5.26 years (1.66×10^8 s).

A cobalt-60 source for use in a school laboratory has an activity of 1.8×10^5 Bq.

Calculate the mass of cobalt-60 in the source.

mass = ... g [3]

© UCLES 2009

BLANK PAGE

Please turn over for Section B.

Section B

Answer **all** the questions in the spaces provided.

9 An amplifier incorporating an operational amplifier (op-amp) has three inputs A, B and C, as shown in Fig. 9.1.

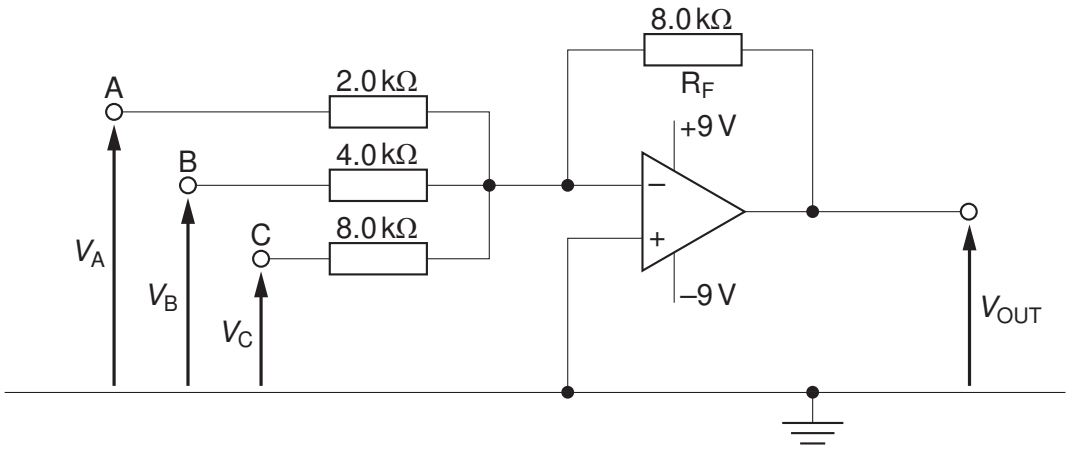

Fig. 9.1

Negative feedback is provided by the resistor R_F of resistance 8.0 kΩ.

For each of the inputs A, B and C, the amplifier may be considered as a single input amplifier. That is, each input is independent of the other two.

When the amplifier is not saturated, the output potential V_{OUT} is given by the expression

$$V_{OUT} = -(4V_A + GV_B + V_C),$$

where V_A, V_B and V_C are the input potentials of the inputs A, B and C respectively and G is a constant.

(a) State two effects of negative feedback on an amplifier.

1. .....

.....

2. .....

.....

[2]

(b) In the expression for the output potential V_{OUT}, the constant G is the gain associated with input B. Show that the numerical value of G is 2.

[1]

(c) The input potentials V_A, V_B and V_C are either zero or 1.0 V.

The magnitudes of some output potentials for different combinations of V_A, V_B and V_C are shown in Fig. 9.2.

V_A/V	V_B/V	V_C/V	V_{OUT}/V
0	0	1	1
0	1	0	……
1	0	0	4
1	0	1	5
1	1	0	……
1	1	1	……

Fig. 9.2

(i) Complete Fig. 9.2 for the three remaining values of V_{OUT}. [1]

(ii) Suggest a use for this circuit.

..... [1]

10 (a) A typical spectrum of the X-ray radiation produced by electron bombardment of a metal target is illustrated in Fig. 10.1.

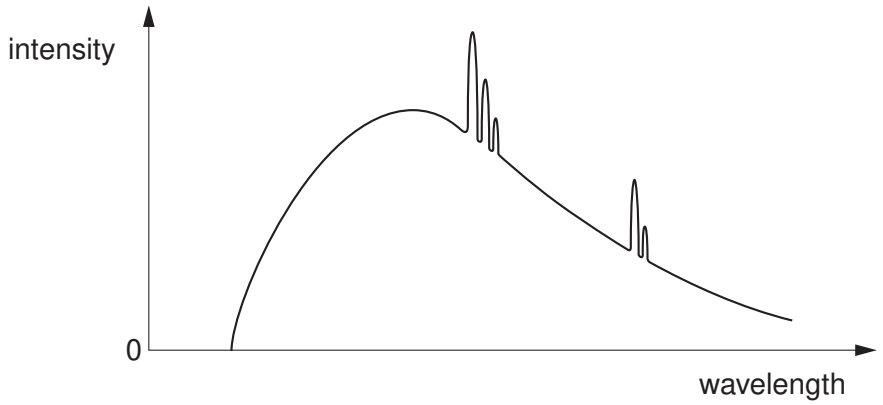

Fig. 10.1

Explain why

(i) a continuous spectrum of wavelengths is produced,

.....

.....

.....

..... [3]

(ii) the spectrum has a sharp cut-off at short wavelengths.

.....

..... [1]

© UCLES 2009

(b) The variation with photon energy E of the linear absorption coefficient μ of X-rays in soft tissue is illustrated in Fig. 10.2.

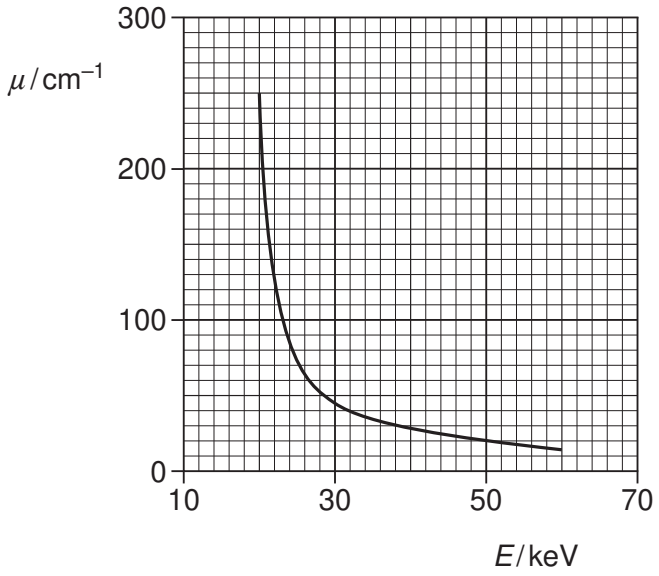

Fig. 10.2

(i) Explain what is meant by *linear absorption coefficient*

.....

.....

.....

..... [3]

(ii) For one particular application of X-ray imaging, electrons in the X-ray tube are accelerated through a potential difference of 50 kV.

Use Fig. 10.2 to explain why it is advantageous to filter out low-energy photons from the X-ray beam.

.....

.....

.....

..... [3]

© UCLES 2009

[Turn over

11 The variation with time of the signal transmitted from an aerial is shown in Fig. 11.1.

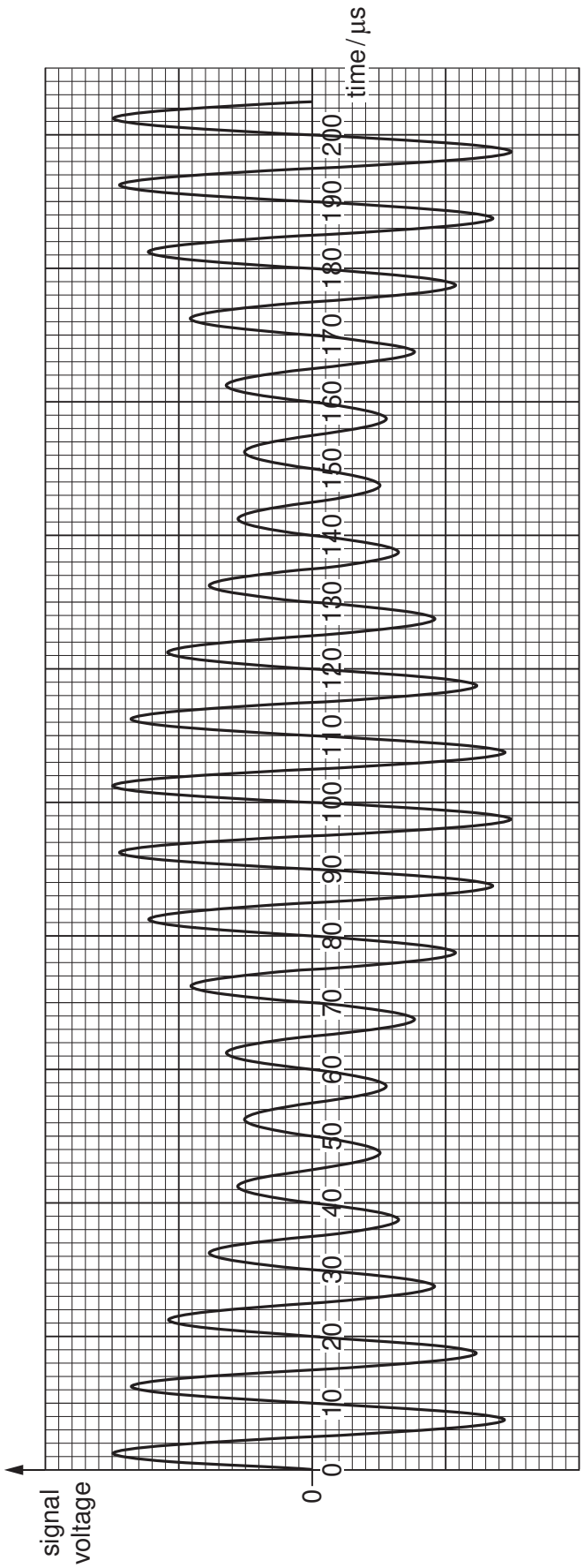

Fig. 11.1

(a) State the name of this type of modulated transmission.

..... [1]

(b) Use Fig. 11.1 to determine the frequency of

(i) the carrier wave,

frequency = ... Hz [2]

(ii) the information signal.

frequency = ... Hz [1]

(c) **(i)** On the axes of Fig. 11.2, draw the frequency spectrum (the variation with frequency of the signal voltage) of the signal from the aerial. Mark relevant values on the frequency axis.

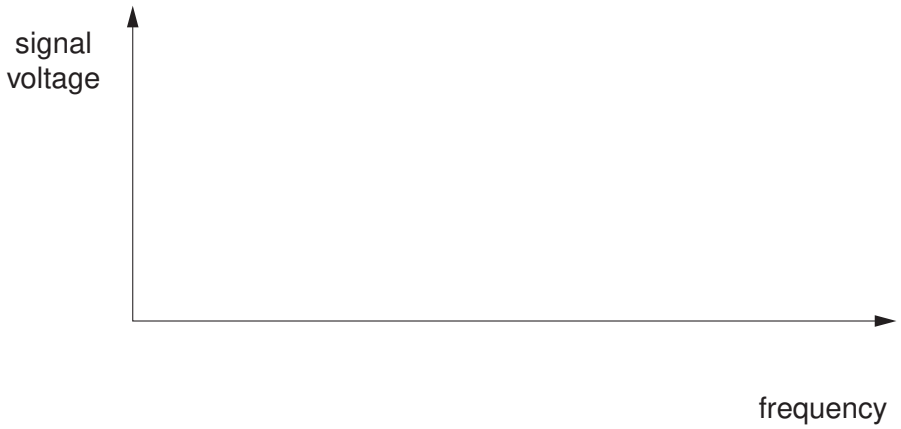

Fig. 11.2

[3]

(ii) Determine the bandwidth of the signal.

bandwidth = ... Hz [1]

12 A block diagram representing part of a mobile phone network is shown in Fig. 12.1.

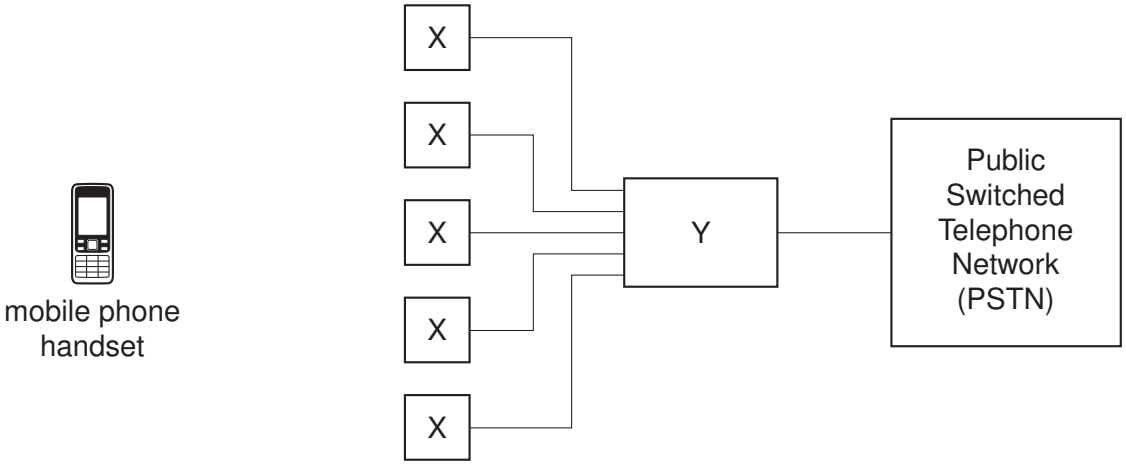

Fig. 12.1

(a) State what is represented by

(i) the blocks labelled X,

..... [1]

(ii) the block labelled Y.

..... [1]

(b) A user of a mobile phone is making a call.

Explain the role of the components in the boxes labelled X and Y during the call.

.....

.....

.....

.....

.....

.....

.....

..... [5]

BLANK PAGE

BLANK PAGE

Permission to reproduce items where third-party owned material protected by copyright is included has been sought and cleared where possible. Every reasonable effort has been made by the publisher (UCLES) to trace copyright holders, but if any items requiring clearance have unwittingly been included, the publisher will be pleased to make amends at the earliest possible opportunity.

University of Cambridge International Examinations is part of the Cambridge Assessment Group. Cambridge Assessment is the brand name of University of Cambridge Local Examinations Syndicate (UCLES), which is itself a department of the University of Cambridge.